Sanova

code SANVR413689CR

Telefon : 0510-48 58 90
E-post: info@sanova.se

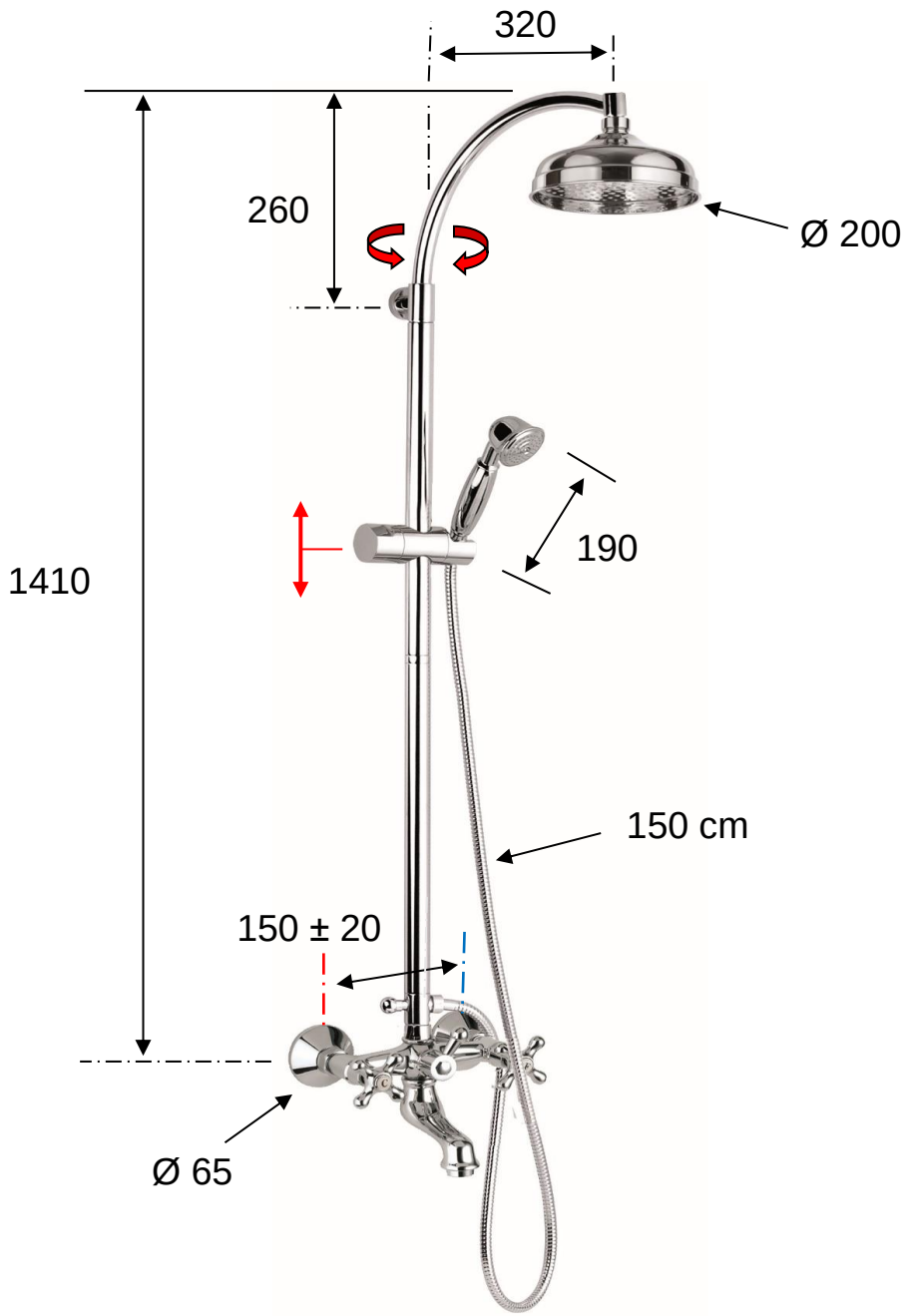

MATERIALS

CHROME PLATED BRASS

CHROME PLATING

UNI EN 248